Description

The ECS177Y is Hall Effect IC. The operating voltage range of ECS177Y is 3V ~ 28V. ECS177Y provides symmetrical magnetic field induction specifications and fast magnetic field switching detection. The magnetic field detection direction of ECS177Y is defined as a south pole of sufficient strength will turn the output ON. In the absence of a magnetic field, the output is OFF.
ECS177Y can be used in magnetic field detection, speed detection, position detection, and non- contact switch.

Feature

- Input voltage range : 3V~28V
- Maximum output sink current : 50mA
- Open collector pre-driver
- Package Type : SOT-23

Application

- DC brush less motor
- Speed detect
- Position detect
- Non-contact switch

Functional Block Diagram

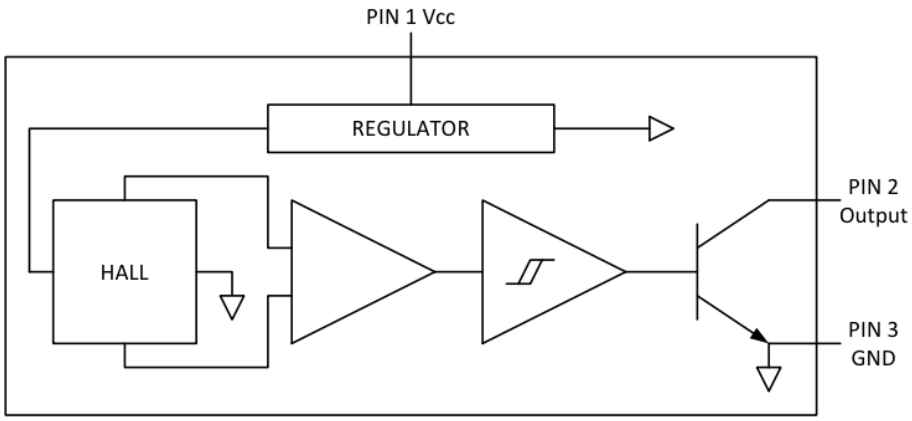

Typical Application Circuit

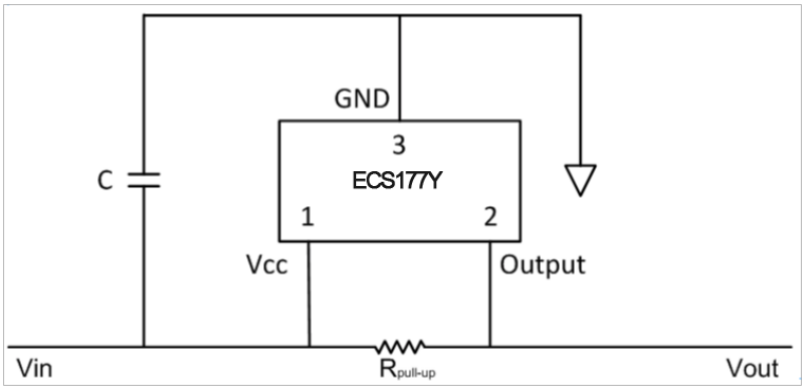

Absolute Maximum Ratings

Parameter	Symbol	Condition	Min.	Typ.	Max.	Unit
Vcc pin voltage				28		V
Output OFF voltage	Vce			28		V
Output ON current	Io	Continuous current		50		mA
Power dissipation		Ta=25°C		300		mW
Thermal resistance	θ ja			0.45		°C/mW

Electrical Characteristics V_{CC}=5.0V, T_A=25°C (unless otherwise specified)

Parameter	Symbol	Condition	Min.	Typ.	Max.	Unit
Operating Temperature Range			-40		125	°C
Storage Temperature Range			-65		150	°C
Junction Temperature					160	°C
Lead Temperature		Soldering, 10 sec			160	°C

DC Electrical Characteristics (at Ta = 25°C)

Parameter	Symbol	Condition	Min.	Typ.	Max.	Unit
Operating Voltage	VCC	No use pin is open (Fig1)	3.0	-	28.0	V
Supply current	ICC	No use pin is open Vcc : 3.0V to 28V (Fig1)	-	3.5	10	mA
Output Saturation Voltage	VSAT	Vcc=12V, Io = 20mA	-	165	200	mV
Output Rise time	tr	RL=500ohm,CL=20pF (Fig1)	0.2	-	0.75	µs
Output Fall time	tf	RL=500ohm,CL=20pF (Fig1)	20	-	150	ns

Magnetic Characteristics (1mT=10Gauss)

ECS177Y-AA

Parameter	Symbol	Min.	Typ.	Max.	Unit
Operate Point	Bop	+30	-	+80	Gauss
Release Point	Brp	-80	-	-30	Gauss
Hysteresis	Bhys		90		Gauss

ECS177Y-A

Parameter	Symbol	Min.	Typ.	Max.	Unit
Operate Point	Bop	+20	-	+80	Gauss
Release Point	Brp	-80	-	-20	Gauss
Hysteresis	Bhys		100		Gauss

Marking Information

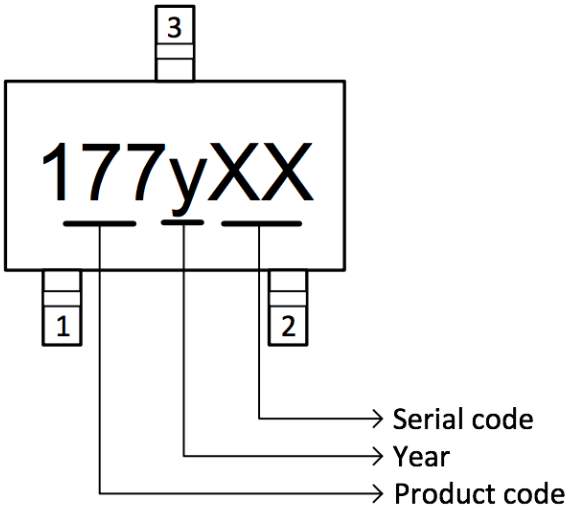

IR Re-flow Soldering Curve

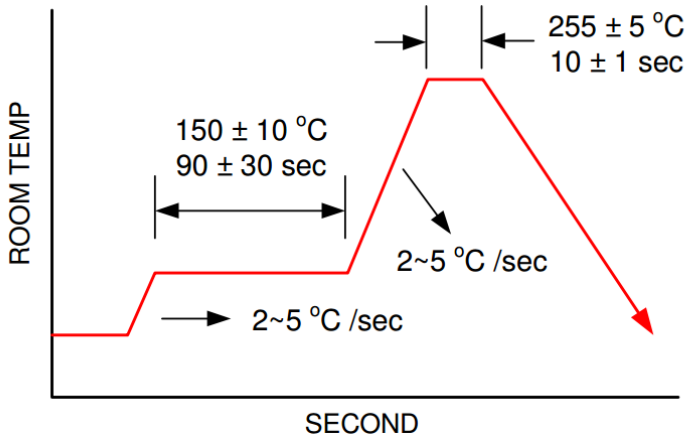

Power Dissipation

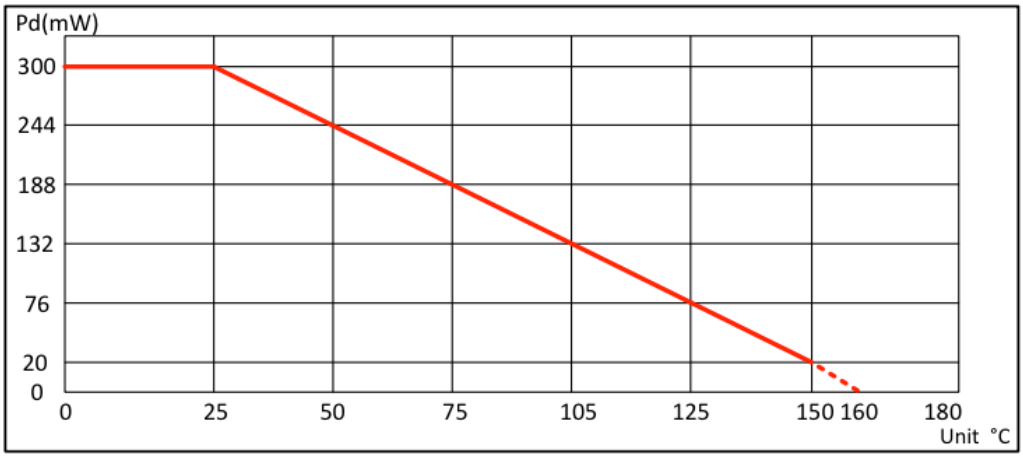

ECS177Y Magnetic Hysteresis Characteristics

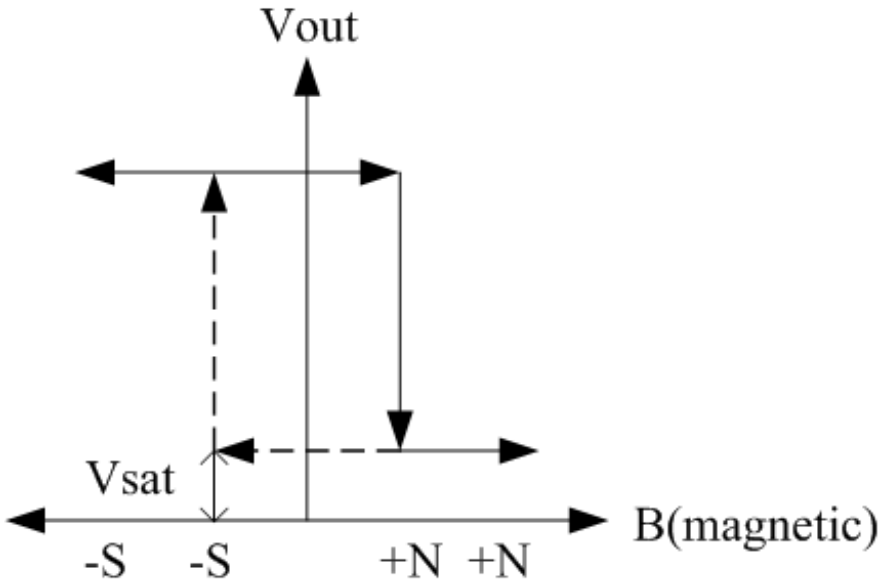

Test Circuits

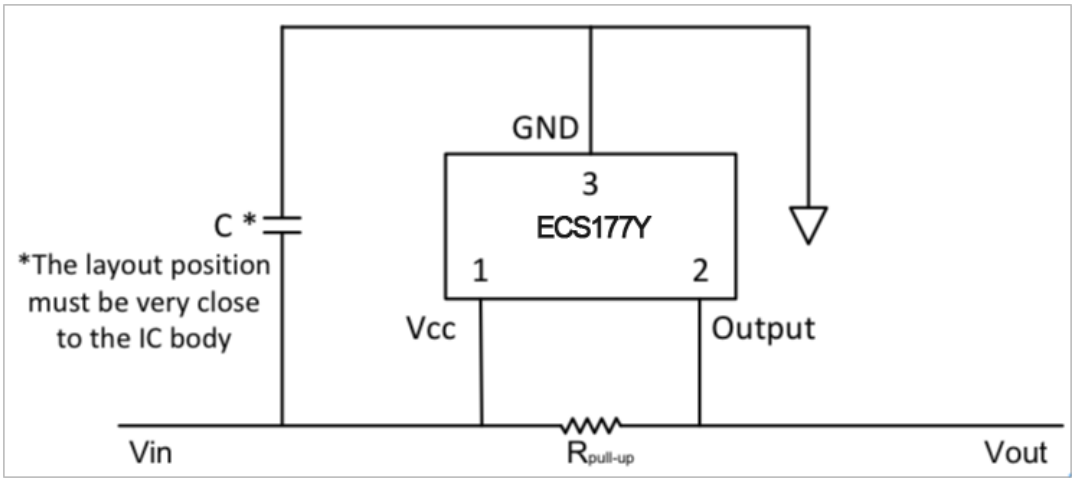

Pin Descriptions

·Name	No.	Description
Vcc	1	IC power supply
Output	2	It's low state during the N magnetic field
GND	3	IC ground

SOT-23

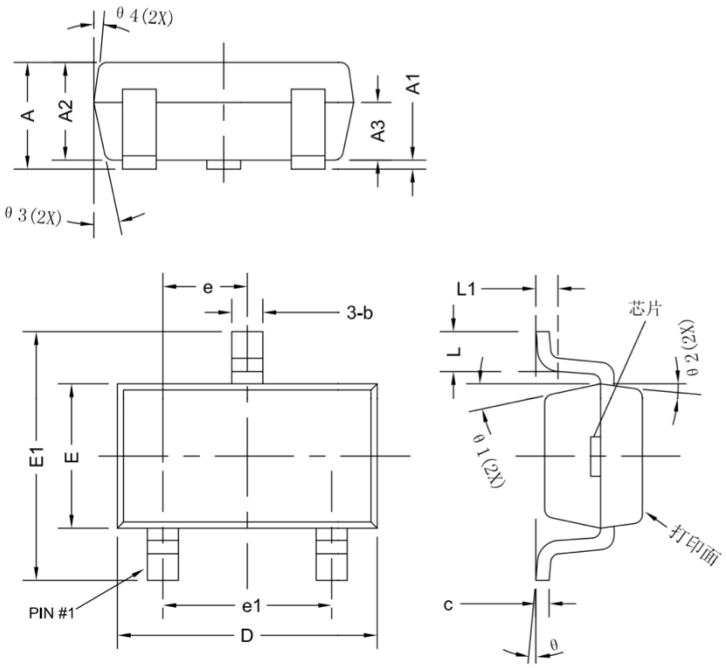

符号	机械尺寸/mm		
	最小值	典型值	最大值
A		–	1.25
A1	0	–	0.1
A2	1	1.1	1.2
A3	0.6	0.65	0.7
b	0.3	0.35	0.5
c	0.1	0.15	0.2
D	2.82	2.926	3.02
E	1.52	1.626	1.72
E1	2.6	2.85	3
e		0.95	
e1	1.8	1.9	2.0
L	0.3	0.45	0.6
L1		0.25BSC	
θ	0	–	8°
θ 1		10°	
θ 2		9°	
θ 3		10°	
θ 4		9°	

Order Information

Part number	Operating Temp	MOQ	Package Type
ECS177Y-AA	-40°C~125°C	3000EA	SOT-23
ECS177Y-A	-40°C~125°C	3000EA	SOT-23